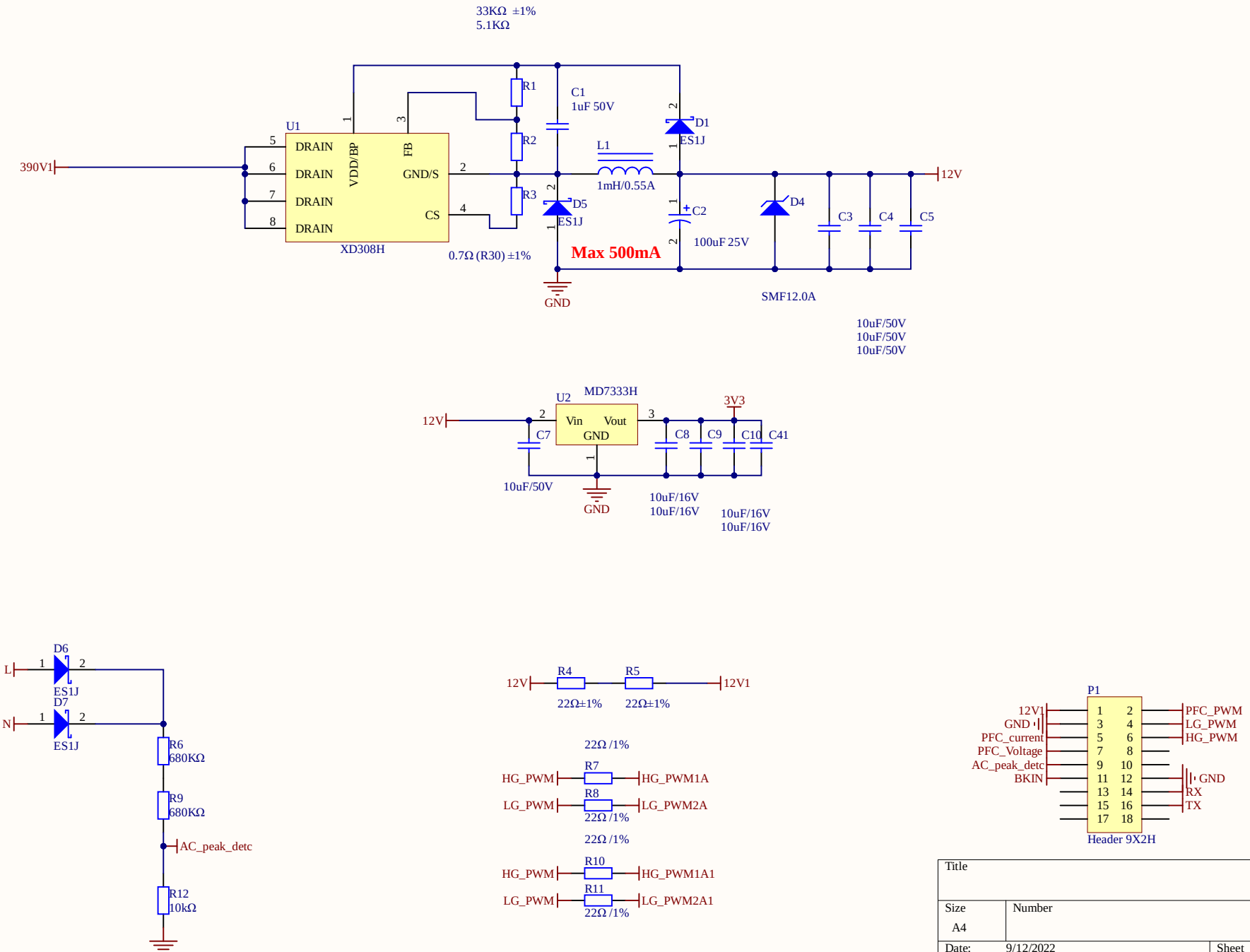

Title		
Size A4	Number	Revision
Date: 9/12/2022		Sheet of
File: C:\Users\..\AUX_POWER1.SchDoc		Drawn By:

隔离电压检测原理：(参考AMC1311)

1）第一步：ADC采集输出电压

2）第二步：串口发送电压数据

3）本方案优点：价格便宜，总成本小于6元，且误差为零

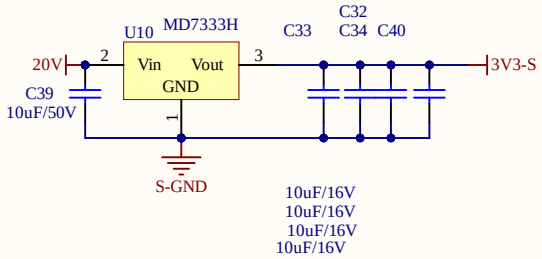

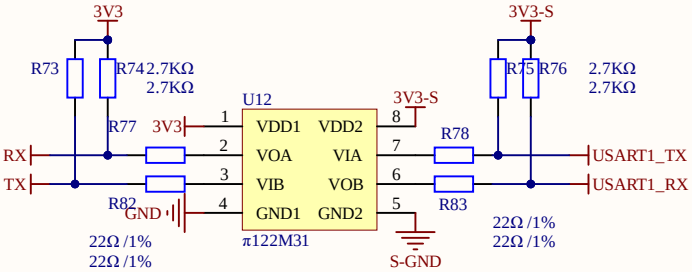

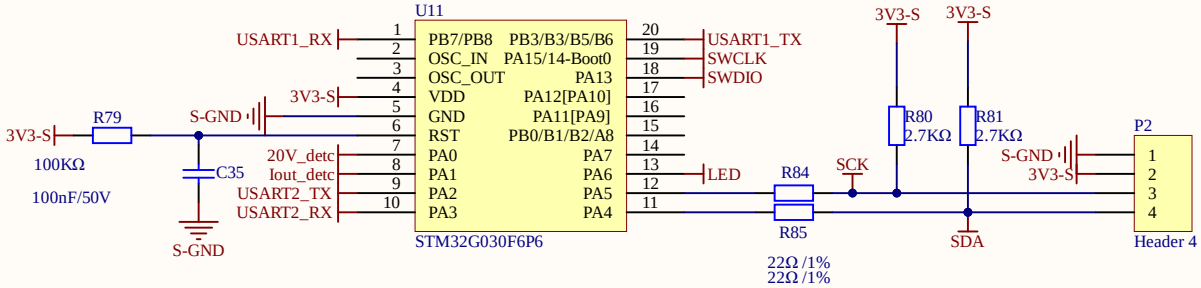

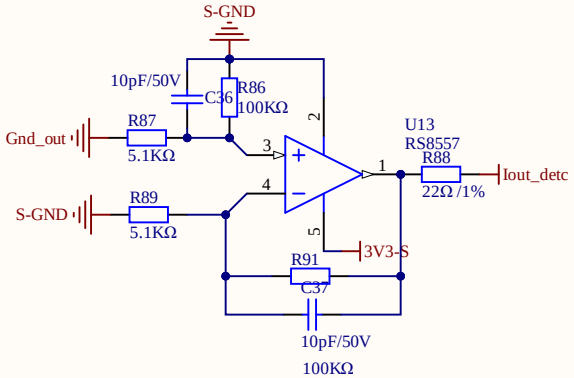

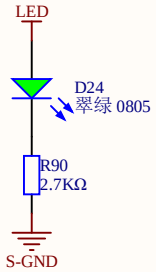

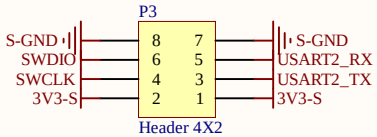

Title		
Size A4	Number	Revision
Date: 9/12/2022		Sheet of
File: C:\Users\..\ISO-V_detc.SchDoc		Drawn By:

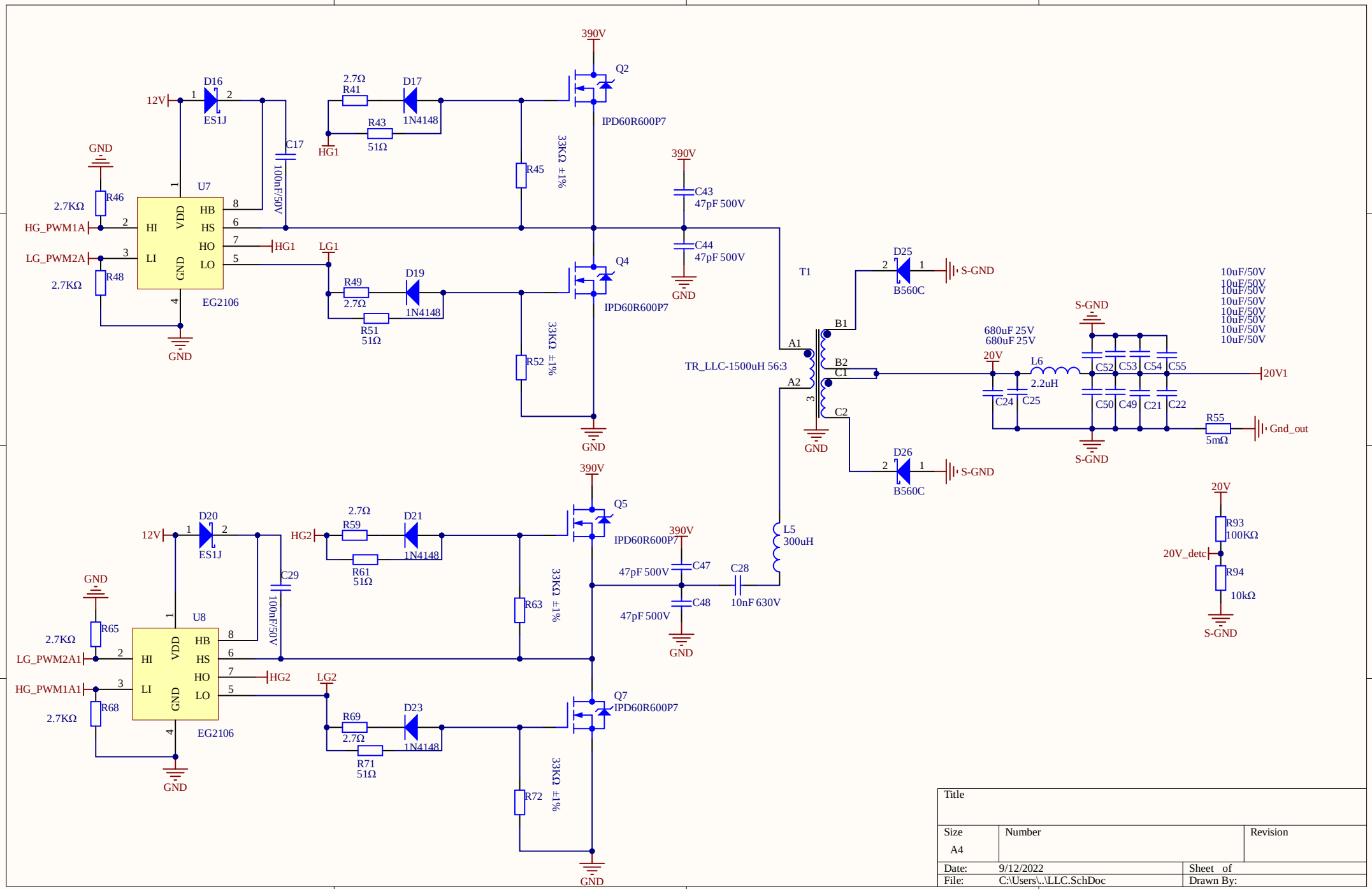

Title		
Size A4	Number	Revision
Date: 9/12/2022		Sheet of
File: C:\Users\..\LLC.SchDoc		Drawn By:

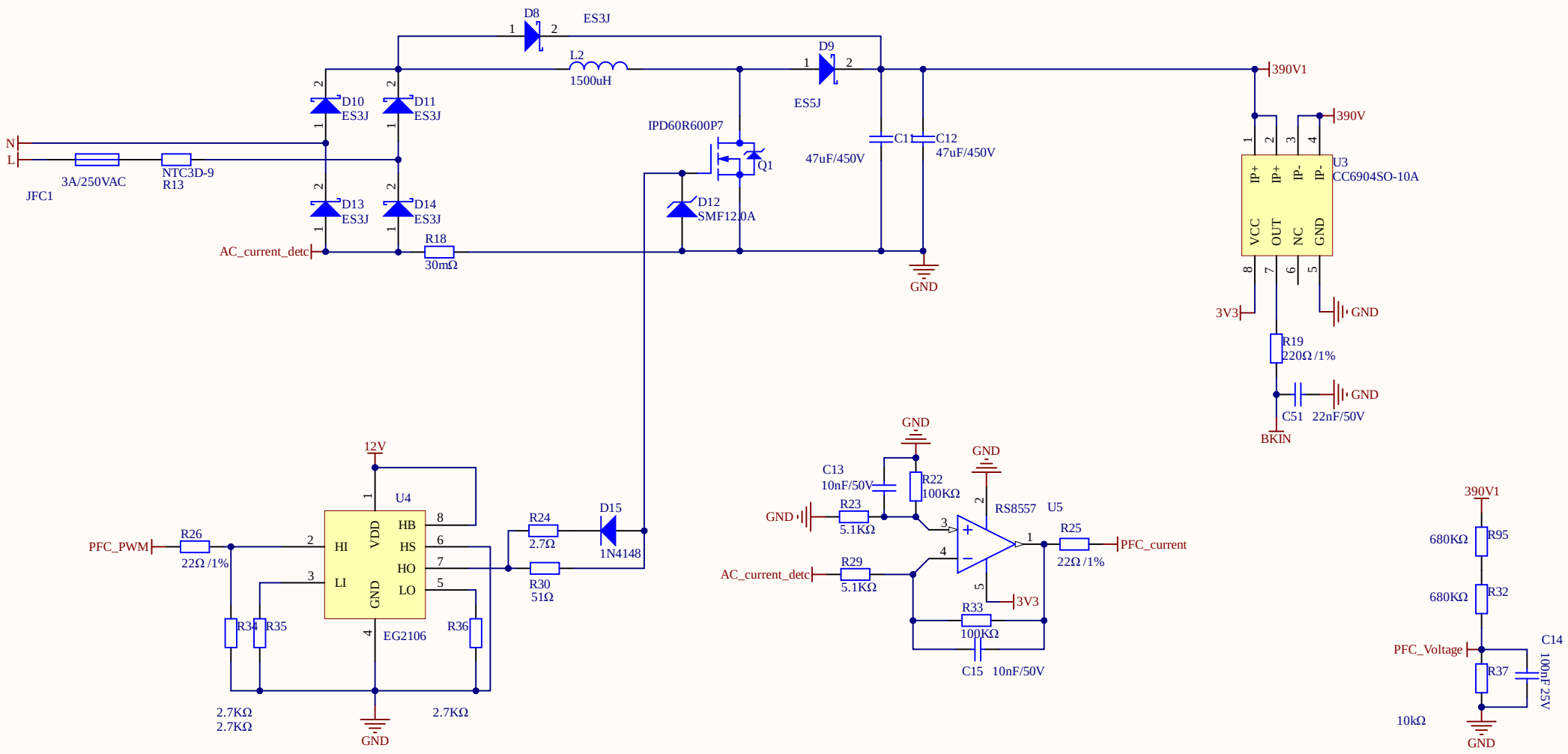

Title		
Size A4	Number	Revision
Date: 9/12/2022		Sheet of
File: C:\Users\..\PFC.SchDoc		Drawn By: